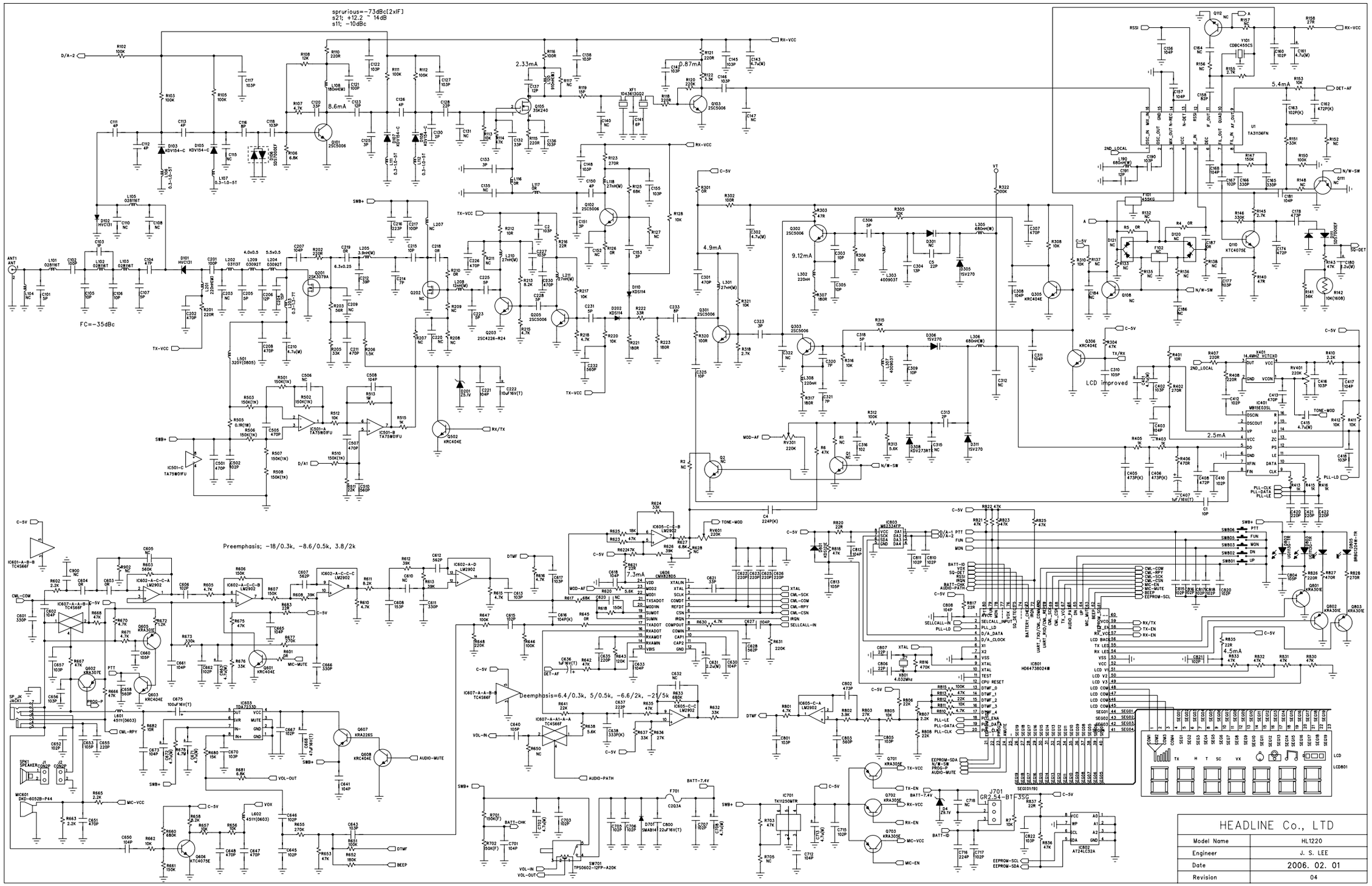
sprurious=-73dBc[2xIF]
s21; +12.2 ~ 14dB
s11; -10dBc
FC=-35dBc
Preemphasis; -18/0.3k, -8.6/0.5k, 3.8/2k
Deemphasis=6.4/0.3k, 5/0.5k, -6.6/2k, -21/5k
LCD improved
HEADLINE Co., LTD
Model Name HL1220
Engineer J. S. LEE
Date 2006. 02. 01
Revision 04